Microwave measurements
an advanced physics lab experiment

Department of Physics, Institute II

The Faculty of Mathematics, Computer Science and Natural Sciences
at RWTH Aachen University

May 2013

Contents

Chapter 1

Introduction

1.1 History and use of microwave measurements

The term *microwaves* refers to alternating current signals with frequencies between 300 MHz and 300 GHz, with a corresponding electrical wavelength between $\lambda = c/f = 1\,\mathrm{m}$ and λ=1 mm, respectively.[1] Figure 1.1 shows the location of the microwave frequency band in the electromagnetic spectrum.

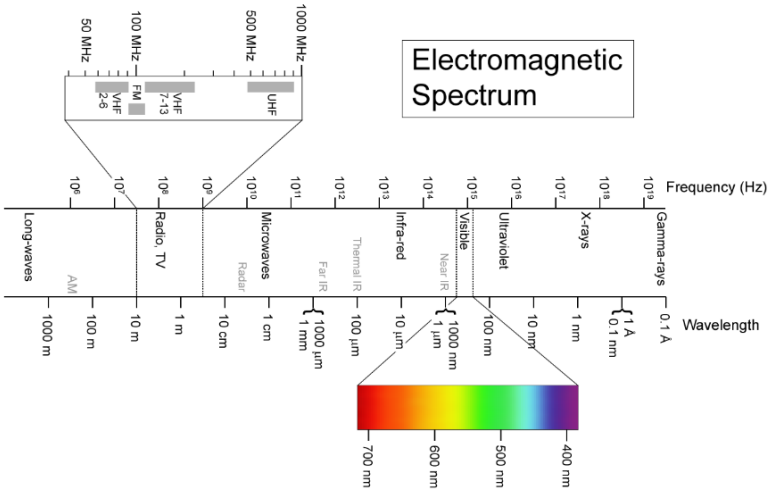

Figure 1.1: Electromagnetic spectrum. The microwave spectrum is widely used for today's communication systems, radar systems, environmental remote sensing, and medical systems. In physics, it is of particular interest because it gives access to the quantum regime, where $\hbar\omega > k_B T$ so that mostly the ground state is occupied in equilibrium. [2].

Microwave engineering started to develop only as far back as WW2 (mainly for radar), although the concepts of electrodynamics were developed by Maxwell about 70 years before that. In communication technology, growing demands on transmission rates and expansion of mobile networks have dramatically increased the use of microwave technology. For mobile telecommunication, microwaves are attractive compared to lower frequencies

because they enable high transmission rates and compact yet effective antennas. On the other hand, engineering challenges tend to grow with increasing frequencies, so that most communication applications use frequencies up to a few GHz.

But also scientific research benefits greatly from microwave techniques, since many molecular, atomic, and nuclear resonances occur at microwave frequencies. In low temperature physics, frequencies of a few GHz are of particular interest because they give access to the dynamics of systems that can be cooled into the quantum ground state. For example, the thermal energy $E = k_B T$ for $T = 50$ mK, which is readily achievable with standard cryogenic techniques, corresponds to a frequency $f = E/h$ of about 1 GHz. Thus, a system with a level splitting ΔE between the ground and first excited state of $\Delta E = h \cdot 5$ GHz would mostly occupy its ground state in thermal equilibrium at $T = 50$ mK. Using 5 GHz microwave pulses, it can be excited into the first excited state. Many qubit experiments, which aim to replace classical bits with quantum mechanical two-state systems to implement quantum computing, rely on this principle.

The electromagnetic theory is a mathematically complete theory and fully explains all phenomena from DC to RF. But solving Maxwell's equations is an elaborate work when circuits or setups become more complex. At low frequencies, the well known Kirchhoff laws provide a great simplifications. "Low frequencies" in this context are frequencies at which the dimensions of the circuit are small compared to the wavelength, so that wave effects can be ignored and a (linear) circuit can be fully described in terms of capacitances, inductances and resitances (so called lumped elements). Mathematically, these components are conveniently characterized by their (frequency dependent and complex) impedance, and quasi-static approximations to the Maxwell's equations are adequate.

A key difference in the microwave regime is that it is often necessary to treat electromagnetic signals as waves, which can propagate along cables and may be reflected at components and transitions. As discussed in section 2.1.2, the concept of impedance remains extremely powerful even for waves. Even when it is possible to think in terms of lumped components, it becomes vital at microwave frequencies to be aware of imperfections of electronic components. Any wire of a few mm length will have a non-negligible inductances, capacitors have a stray inductance, and inductors a stray capacitance that cannot be neglected. Often, lumped element concepts break down completely.

1.2 Goal and philosophy of this lab

The goal of this lab is to acquaint you with the central concepts and measurement techniques required to use microwaves. It is also intended to train your inquisitiveness. Rather

than carrying out a series of measurements with detailed instructions, finding out what measurements are useful to reach a given goal is part of the game for this lab. You are explicitly encouraged to play around and explore using the equipment provided. More specifically, you should come up with measurements that would test a concept, form a hypotheses of what you would expect to see, and check if it is confirmed. This may be unfamiliar and appear challenging, but is roughly how science proceeds, both in the big picture and in everyday operations, for example when exploring new systems and acquainting oneself with unfamiliar measurement procedures.

1.3 Outline

The main part of this lab manual will explain the concepts and components to be used in the experiment. Rather than giving a detailed step-by-step instruction, a few guidelines and suggestions what experiments to pursue will be given at the end in section 6. The idea is that you will figure out yourself what measurements to perform. Section 2 will start out by discussing how microwave signals propagate in transmission lines, how they are described quantitatively, and introduce key concepts such as impedance and reflections. Section 3 will then explain a number of different high frequency circuit components, all of which will be relevant in the lab experiments. Section 4 will close with an overview of a vector network analyzer, which is the measurement instrument used in the lab.

1.4 Guideline for preparation

You are expected to be familiar with the basic concepts and definition, and should be able to apply them. During the lab itself, you will deepen your understanding interactively by planning, performing and analyzing a series of relatively short experiments. Ideally, you will come up yourself with what to measure. The evaluation will be based on how well you understand the concepts, how well you are able to translate them into experiments, how well you interpret the resulting information, and whether you provide a sound presentation of your procedures and main results. As part of the preparation, you should have a look at the suggested measurements and develop some thoughts of how you might approach them, but it is not expected that you develop a detailed plan of action beforehand.

Chapter 2

Microwave signals

2.1 Waves in transmission lines

While it is possible to send microwaves through open space, for lab use it is normally more adequate to transmit them along some kind of cable or other guiding structure, called transmission line. However, the voltage or current will not be constant along a wire (even in the absence of ohmic losses), but travel as a wave. Thinking in terms of waves and learning how they propagate along a transmission line is thus a key step towards understanding microwaves.

A transmission line consists of one or several long conductors which confine the wave to a region of space near them. Examples are coaxial cables, a pair of wires, or hollow tubes. It is possible and often necessary to determine the properties of a transmission line by solving the Maxwell equations in three dimensional space. Here, we only outline the procedure to do so and then focus on a simpler model based on lumped element concepts. For a line of constant cross section extended along the z direction, one would make an ansatz of the form

$$\vec{F}(\vec{r},t) = \vec{F}_0(x,y)e^{i(\omega t \pm kz)},$$

where the vector field $\vec{F}$ can be the electric or magnetic field or the vector potential. It turns out that one can find solutions in which either $\vec{E}$ or $\vec{B}$ are perpendicular to the direction of propagation. These are called transverse electric (TE) and transverse magnetic (TM) modes, respectively. A detailed understanding of these modes is necessary when working with hollow, tube-like wave guides, which is often necessary above about 20 GHz to avoid excessive losses.

For transmission line geometries with (at least) two conductors, one finds an additional solution where both $\vec{E}$ and $\vec{B}$ are transverse, so called TEM modes. These will be our main focus, and we will analyze them with a simpler, more intuitive approach. One of the most widespread types of transmission lines supporting TEM modes is a coaxial cable, which has a circular cross section consisting of an inner conductor surrounded by a dielectric and an outer conductor as shown in figure 2.1. Other examples are two parallel wire, or

a (usually flat) conductor above a ground plain. The latter is called a microstrip line and often used on circuit boards.

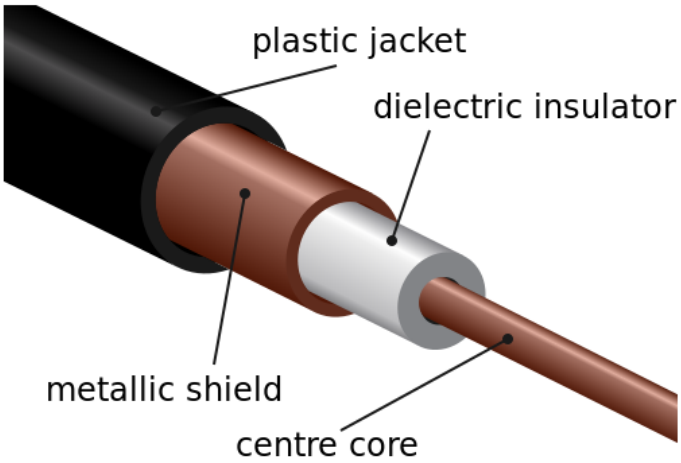

Figure 2.1: Composition of a coaxial cable [4].

It turns out that the equations for the transverse dependence of an electromagnetic TEM wave are independent of frequency ω and wave number k, and that the electric and magnetic field between the inner and outer conductors are in phase with each other and perpendicular to the propagation direction. Because of the frequency independence, one can set $\omega = ck = 0$, which shows that the fields are the same as the static fields that can exist between the conductors. The TEM modes can therefore be obtained by solving the 2D Laplace equation for the electrostatic potential $\Phi(x, y)$ between the two conductors. Because of their frequency independence (i.e., lack of dispersion), TEM modes propagate (ideally) distortion-free at all frequencies, which is a desirable property for signal transmission. In the following section, we will develop a simplified description of TEM mode propagation.

2.1.1 Circuit model of a transmission line

Since the fields of a TEM mode can be identified with static fields, one can unambiguously define a corresponding voltage and current. These are associated with a capacitance C' and inductance L'. To account for resistive losses, we also include a resistance R'. All of these quantities are defined per unit length of the transmission line. Specifically, they are given by [5]

$$L' = \frac{\text{magnetic flux per unit length}}{\text{total current}}$$

$$C' = \frac{\text{total charge per unit length}}{\text{voltage difference between the two conductors}}$$

$$R' = \frac{\text{resistive longitudinal potential gradient}}{\text{total current}}$$

Note that charge neutrality requires that equal and opposite charges and currents appear on the two conductors.

In the following, we use these concept to model the transmission line as an electrical network with distributed parameters. Figure 2.2 shows an equivalent circuit diagram of a short (compared to the wavelength) section of transmission line of length dz. Defining the voltage and current at the entry as $U(z,t)$ or $I(z,t)$ and writing those at the output as $U + \frac{\partial U}{\partial z}dz$ and $I + \frac{\partial I}{\partial z}dz$, it follows from Kichhoff's rules that

$$U - \left(U + \frac{\partial U}{\partial z}dz\right) = IR'dz + L'dz\frac{dI}{dt},$$

or

$$\frac{\partial U}{\partial z} = -IR' - L'\frac{\partial I}{\partial t} = -\left(R' + i\omega L'\right)I, \tag{2.1}$$

where we used $U = U_0 \cdot e^{i\omega t}$ and $I = I_0 \cdot e^{i\omega t}$ [5].

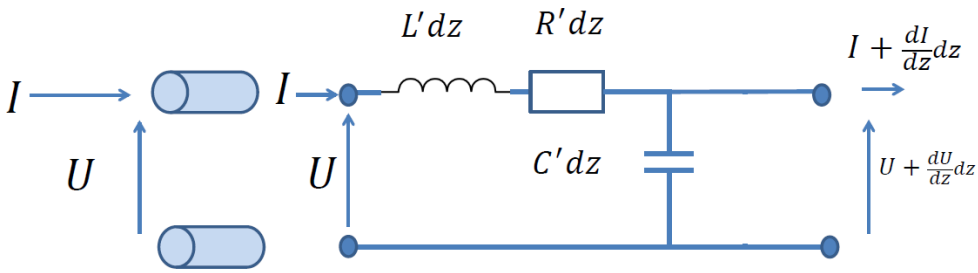

Figure 2.2: The coaxial cable can be modeled as an infinite number of L-, C-, and R- elements.

Similarly, one obtains

$$I - \left(I + \frac{\partial I}{\partial z}dz\right) = C'dz\frac{dU}{dt},$$

or

$$\frac{\partial I}{\partial z} = -C'\frac{\partial U}{\partial t} = -i\omega C'U. \tag{2.2}$$

Equation 2.1 states that the longitudinal change in voltage between the conductors between input and output is equal to the voltage drop over R' and L'. Equation 2.2 states that the output current differs from the input current by the charge accumulated on the conductors [5].

Substituting these into each other one obtains the one-dimensional wave equations

$$\frac{\partial^2 U}{\partial z^2} - R'C'\frac{\partial U}{\partial t} - L'C'\frac{\partial^2 U}{\partial t^2} = 0, \tag{2.3}$$

or

$$\frac{\partial^2 U}{\partial z^2} + \omega^2 L'C'U - i\omega R'C'U = 0. \tag{2.4}$$

A similar equation is obtained for the current I.

Rewriting the general propagating wave solution in the form $U(z,t) = U(z)e^{i\omega t}$ with

$$U(z) = \left(U^+ e^{-\gamma z} + U^- e^{\gamma z}\right), \tag{2.5}$$

and inserting this ansatz into equation 2.4 implies that the propagation constant γ must satisfy

$$\gamma^2 - i\omega R'C' + \omega^2 L'C' = 0.$$

Hence, $\gamma = \alpha + i\beta$ is given by

$$\gamma = \left[-\omega^2 L'C' + R'G' + i\omega R'C'\right]^{\frac{1}{2}}.$$

α is a measure for the attenuation (loss) in the cable, while β corresponds to the familiar wave vector. To build intuition, it is instructive to neglect losses ($R' = 0$). The propagation constant is then given by

$$\gamma = i\beta = ik = i\omega\sqrt{L'C'} = i\omega/v.$$

Hence, one finds the same linear dispersion relation as for plane waves in vacuum or a homogeneous medium, with velocity $v = v_G = v_\phi = \frac{c}{\sqrt{\epsilon}} = \frac{1}{\sqrt{LC}}$, where v_G is the group velocity, v_ϕ is the phase velocity, c is the speed of light in vacuum, and ϵ is the dielectric constant. In typical coaxial cables, $v_\phi \approx \frac{2}{3} \cdot c$ due to the ϵ_r of the dielectric between the conductors. (As an example the insulating layer polyethylene was assumed with an $\epsilon = 2.3$).

In the lossless case, the wave equations for current and voltage also simplify to the familiar generic form

$$\left(\partial_t^2 - \frac{1}{LC}\partial_z^2\right)V = 0, \quad \left(\partial_t^2 - \frac{1}{LC}\partial_z^2\right)I = 0. \tag{2.6}$$

2.1.2 Characteristic Impedance

An extremely important parameter of a transmission line is the characteristic line impedance, which determines how a wave behaves when reaching the end of a transmission line, or a transition to another one. It is defined as the ratio of voltage and current of a propagating wave, $Z_L = U^+/I^+ = U^-/I^-$, where $I_\pm$ are defined analogously to $U_\pm$. The expression for the current resulting from equation 2.1 is

$$I(z) = I^+ e^{-\gamma z} - I^- e^{\gamma z} = \frac{\gamma}{R' + i\omega L'} \left(U^+ e^{-\gamma z} - U^- e^{\gamma z} \right).$$

Hence we obtain

$$Z_L = \frac{R' + i\omega L'}{\gamma} = \left(\frac{R' + i\omega L'}{i\omega C'} \right)^{\frac{1}{2}}$$

In the lossless case, $R' = 0$, the characteristic line impedance purely real and equals [5]

$$Z_L = \sqrt{\frac{L'}{C'}}.$$

In most cases, the imaginary part of the line impedance can be safely neglected. In principle, the line impedance can be varied by choice of geometry and material, though it is difficult to achieve values very different from the value of free space, $\sqrt{\mu_0/\epsilon_0} = 377$ Ω. As we will show below, complete transmission of a wave from one components to another requires that their impedances are the same. Hence, the microwave engineering community has settled for a value of 50 Ω, which is a compromise between a high power transmission capacity and low loss. Nearly all commercial components are designed to have an impedance near 50 Ω, with the exception of telecom components, which also use 75 Ω. It is important to note that the line impedance is not the electrical resistance of a cable. Rather, it is the apparent resistance arising from the capacitance and inductance that one would measure with a short pulse before that pulse is reflected from the end of the cable. Of course, an impedance can also be defined for lumped components in the usual way.

2.1.3 Losses and skin effect

As we have seen, the propagation coefficient γ has a real part which corresponds to attenuation of a wave as it travels along the transmission line. Expansion of equation 2.5 for small R shows that it is given by $\alpha = R'/2Z_L$. These losses are important to consider when designing high frequency circuits. In particular, for reasons explained in the introduction, many experiments are carried out at ultra-low temperatures where the available

cooling power is limited to a few microwatts. Hence, the heat load introduced from room temperature due to cabling can be an issue and needs to be minimized. Since high thermal resistance is correlated with high electrical resistance, cryogenic requirements often impose relatively large R'.

In determining R', it is important to consider the so-called skin effect, which confines AC current flow to a layer near the surface of a conductor. The skin depths δ over which the current density is reduced by a factor $\frac{1}{e}$ can be shown to be given by

$$\delta = \sqrt{\frac{2\rho}{\mu_0 \omega}},$$

where ρ is the resistivity of the material. The skin effect arises from the fact that the current flowing in the line generates a magnetic field, whose time dependence induces a voltage. This voltage turns out to impede the current flow deep inside the conductor, thus confining it to the surface. An important consequence of the skin effect is that the effective AC resistance of a transmission line becomes frequency dependent. The total cross section available for current transport in a conductor of circumference s is given by $s\delta$, leading to a resistance per unit length of $R' = \rho/(s\delta) = \sqrt{\rho\omega\mu_0/2s^2}$. Substituting this result into equation 2.5 using $\alpha = R'/2Z_L$ shows that the voltage attenuation along a transmission line of length L is given by $e^{-\sqrt{\omega/\omega_0}}$, with $\omega_0 = \frac{8Z_L^2 s^2}{\mu_0 \rho L^2}$. Hence, losses increase rapidly above the (geometry and material dependent) cutoff frequency ω_0.

2.1.4 Wave and DC transport picture

We have seen that waves propagate along a transmission line with some attenuation and picking up a phase shift, and that two directions of propagation are possible. It is instructive to consider how DC transport emerges from this picture. At frequencies corresponding to wavelength $\lambda = c/f$ much larger than the cable length L, the phase change kL along a cable can be neglected, so that the total voltage is (up to a time dependent phase factor and neglecting losses) given by $U = U_+ + U_-$ along the whole cable. Similarly, the total current is $I_+ - I_-$, with the minus sign arising from the opposite propagation directions. Hence, the familiar voltage and current from (quasi) DC transport can be understood in terms of a superposition of left- and right-propagating waves.

At higher frequencies however, the two components of such a superposition will interfere to create a standing wave because the relative phase of the two waves varies along the cable (see also section 2.2.2). Hence, the amplitude of the oscillating voltage also becomes position dependent, and specifying the total voltage at any particular point is not very

useful. Instead, it us much more appropriate to describe the signals in terms of the amplitudes U_+ and U_- of the travelling waves.

2.2 Wave Reflections - considering the end of the line

Since real cables are not infinitely long but used to carry signals from one device or component to another, we consider what happens when a wave reaches the end of a cable. As long as the device connected to it is linear, it can be described by an impedance $Z_A(\omega) = U_A(\omega)/I_A(\omega)$, where U_A and I_A are the voltage across and current through the device, respectively. Examples for a device would be another cable, an amplifier, or an LC-resonator. This section will thus explain the main characteristics of a transmission line which is terminated with an arbitrary impedance Z_A (figure 2.3). We will show in the following that if $Z \neq Z_L$, the incoming wave is partially reflected, similar to light entering media with a different index of refraction. The basic idea is to combine an incoming and reflected wave such that they satisfy the boundary conditions at the end of the line. The line is assumed to be lossless with impedance Z_L and propagation constant $\gamma = i\beta$.

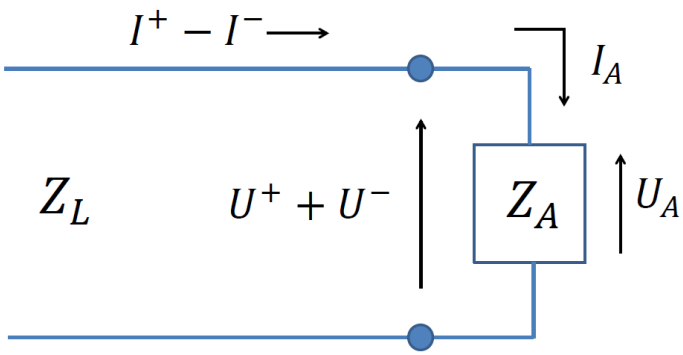

Figure 2.3: When a voltage wave $U^+e^{-i\beta z}$ with a current $I^+e^{-i\beta z}$ meets the terminating impedance, a reflected voltage wave $U^-e^{i\beta z}$ with a current $-I^+e^{-i\beta z}$ is produced. The ratio of the incoming and reflected wave amplitudes is determined by the terminating load. The total line voltage must equal the voltage across the load, and the line voltage must be continuous.

2.2.1 Reflection and transmission coefficient

As illustrated in figure 2.3, for a wave arriving from the left, continuity of voltage and current at the connection imply that

$$\begin{aligned} U_+ + U_- &= U_A, \\ I_+ - I_- &= I_A. \end{aligned}$$

Since $U_\pm = Z_L I_\pm$, it follows from the second equation and the definition of Z_A that

$$U_+ - U_- = \frac{Z_L}{Z_A} U_A.$$

Simple algebra then leads to

$$U_- = \frac{Z_A - Z_L}{Z_L + Z_A} U_+.$$

The ratio between the amplitudes of the incoming and reflected waves,

$$R = \frac{U_-}{U_+} = \frac{Z_A - Z_L}{Z_A + Z_L}, \tag{2.7}$$

is called the reflection coefficient. As a result of the linearity of all components involved, it is independent of the amplitude. In general, it is a complex quantity whose phase determines the phase shift acquired by the wave as it is reflected.

If the load connected to our line is another transmission line or some other device in which defining a wave amplitude is meaningful, it is useful to also define a transmission coefficient T. If the wave is coming in from the left and is partially transmitted to the right, there is no left-propagating mode to the right of the transition as long as no further reflections occur. Thus, the voltage U_A at the transition point directly yields the amplitude of the transmitted wave, so $T = U_A/U_+$. It follows that

$$T = 1 + R = \frac{2Z_A}{Z_L + Z_A}. \tag{2.8}$$

One can see that for $Z_A = Z_L$ the reflection coefficient is zero. In this case the total power of the incoming wave is transferred to the load, and no power is reflected to the generator. This is the natural behavior expected from a fictitious junction between two sections of a cable with the same impedance. One says that the load is impedance matched to the line. Minimizing undesired reflections which would reduce transmission through a chain of microwave components is one of the main practical challenge in microwave techniques and requires very accurate control of component dimensions.

For signal transmission, good impedance matching is highly desirable to prevent unwanted reflections. But one can also make use of the reflections off a load to detect changes in its impedance. Using a tank circuit for example, whose impedance near resonances changes rapidly as a function of its parameters, one can detect a change in inductance, capacitance of resistance with a very high sensitivity. This will be further explored in section 3.1.

2.2.2 VSWR ratio

We have seen that both the reflection coefficient and the input impedance Z_A of a load can be used to determine how much of a signal is transmitted. It is common to use a third quantity, the voltage standing wave ration (VSWR), which is often specified in component data sheets.

Without reflection the magnitude of the voltage along the line is constantly $|U_+|$. If a reflected wave exists, then both waves interfere to create a standing wave. The voltage at every point of the transmission line ($z < 0$) is then given by

$$U(z) = U_+ e^{-i\beta z} + RU_+ e^{i\beta z},$$

with an amplitude of

$$|U(z)| = |U_+| \left|1 + Re^{2i\beta z}\right|,$$

Writing $R = |R|\, e^{i\phi_R}$, one obtains

$$|U(z)| = |U_+| \left[(1 + |R|)^2 - 4\,|R| \sin^2\left(\beta l - \frac{\phi_R}{2}\right)\right]^{\frac{1}{2}}.$$

This result shows that $|U|$ varies between the maxima $|U_+|\,|(1 + |R|)|$ for $\beta l - \frac{\phi_R}{2} = n\pi$ and minima $|U_+|\,(1 - |R|)$ for $\beta l - \frac{\phi_R}{2} = n\pi + \frac{\pi}{2}$ as one moves along the line.

The ratio of the maximal transmission-line voltage to the minimal transmission-line voltage is called voltage standing wave ratio (VSWR).

$$\text{VSWR} = \frac{1 + |R|}{1 - |R|}.$$

Substituting equation 2.7, we see that for real impedances, VSWR is simply given by $Z_>/Z_<$, where $Z_{>(<)}$ is the greater (smaller) of the two impedances Z_L and Z_A. Thus, the VSWR directly specifies the impedance mismatch. It is common to specify the VSWR in the form 1.3:1, which means simply 1.3

2.2.3 Multiple reflections

So far we have considered a reflection at a single connection. However, a wave may encounter an impedance mismatch at two different positions. The total reflection or transmission then results from the wave travelling back and forth several times between the two points, each time acquiring a phase shift. Analogous to a Fabry-Perot interferometer in optics, all these contribution have to be added coherently while taking the phase shift into account.

In figure 2.4 the total transmission coefficient of a double-impedance mismatch has been calculated with respect to the phase $\phi = 2kL = 2L\omega/v_\phi$ from the term $e^{ikz} = e^{i\phi}$. Depending on the strength of the individual transmission, a very strong oscillatory variation in the transmission can occur as a function of frequency. On the one hand, this effect can be used to create resonators by nearly shutting off a section of transmission lines. On the other hand, it is to be avoided in a signal path since a frequency dependent transmission tends to complicate the interpretation of measurements.

2.2.4 Scattering parameters

We have studied in some detail how to describe the reflection of a wave at a single impedance terminating a line. Since such a load has two connections, it is called a two-terminal device. Given that any TEM mode transmission line connection involves two conductors, one alternatively also speaks of one port. Thus, a port is basically a single microwave connection to or from a device. We now generalize the reflection coefficient of a one-port device to multi-port devices by defining the so called scattering or S-parameters. For a linear component with N terminals labeled $1 \dots N$, the S-parameter S_{ij} is defined as U_i^-/U_j^+ with $U_k^+ = 0$ for $k \neq j$. Analogous to the incoming and reflected wave of section 2.1.1 $U_i^{+(-)}$ is the amplitude of the wave arriving at (departing from) port i. In words, S_{ij} is the ratio of the amplitude emitted from port j to that of a wave arriving at port i with no other incoming waves. Hence, the reflection coefficient R corresponds to S_{11}. Note that since reflection and transmission depend on the impedance of the transmission lines connected, the S-parameters always refer to a specific impedance (typically 50 Ω). When specified in dB (see section 2.3), S_{ii} is also referred to as the return loss of port i, and S_{ji} (for $j \neq i$) is called the insertion loss.

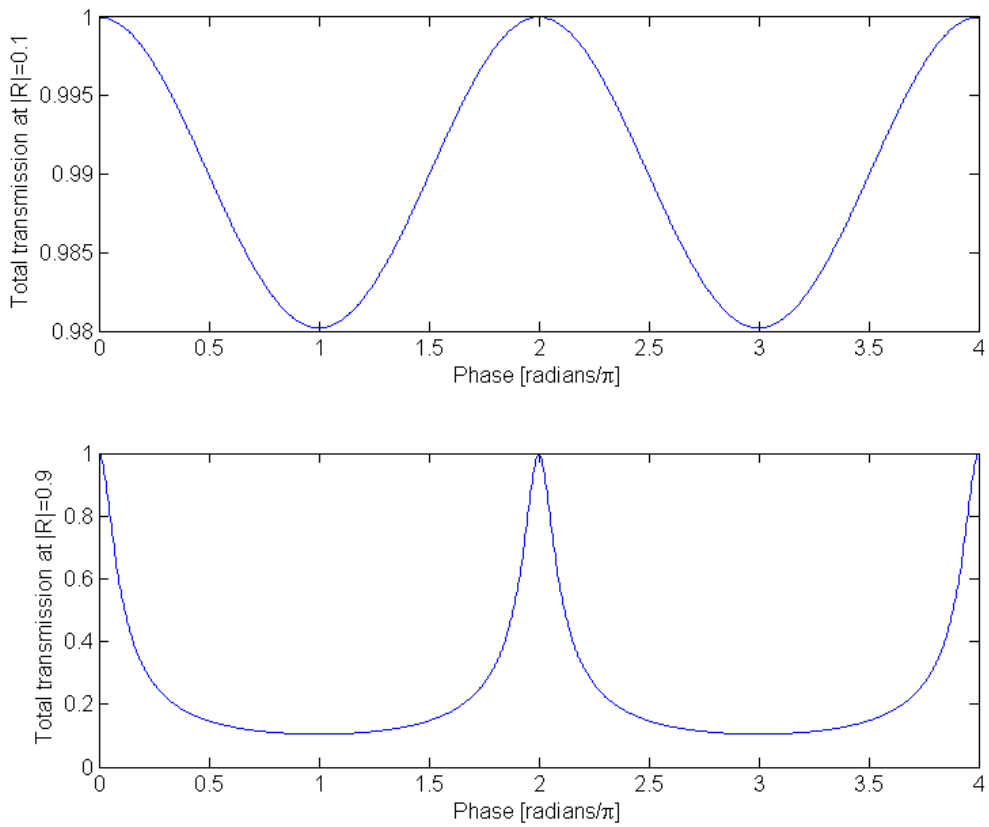

Figure 2.4: Example for the total transmission coefficient for a double impedance mismatch and impedance $Z_1 = Z_3$. At $\lambda = l$ the system is at resonance and the transmitted wave is at it's maximum. If $|R| \approx 1$ (which corresponds to an open or short) transmission is very low, except at resonance. $|R| \approx 0$ gives a high transmission at all frequencies.

2.3 Power levels and decibels

So far we have considered the amplitudes of waves in transmission lines. In many cases, it is customary to instead specify the corresponding power levels transmitted along the line. The power transmitted at any point in time t is given by $P(t) = U(t)I(t)$, where U and I are the voltage and current of the wave component traveling in the direction of transmission. This relation can be understood by thinking of the receiving side of the transmission line as a lumped impedance with the same value as the line impedance Z_L, so that the power is just the work done on it. In most cases, one is only interested in the time average $\bar{P}$ and thus has to average over a full period $\tau = 1/f$. For a harmonic signal where current and voltage are in phase, as is the case in a transmission line with

real impedance Z_L, and have amplitudes U_0 and I_0, one obtains

$$\bar{P} = \int_0^\tau P(t)dt = U_0 I_0/2 = U_0^2/2Z_L = Z_L I_0^2/2.$$

If using rms voltage and current, the factors 1/2 have to be dropped. A useful number to remember is that 1 mW of power at 50 Ω corresponds to an rms voltage of 224 mV.

In microwave engineering, power levels are usually specified in dBm (meaning decibel with respect to 1 mW), defined as

$$\text{Power [dBm]} = 10 \cdot \log_{10}\left(\frac{\text{Power}}{1\text{ mW}}\right). \tag{2.9}$$

Hence, 1 mW corresponds to 0 dBm, 1 W to 30 dBm.

It is also common to use decibels to specify transmission or reflection coefficient (i.e., the insertion and return loss, or sometimes gain). By convention, decibels specify the base 10 logarithm of a power ratio multiplied by 10. For the ratio of two power levels (P_1 and P_2) a decibel (dB) is defined as

$$\text{Loss/Gain [dB]} = 10 \cdot \log_{10}\left(\frac{P_{out}}{P_{in}}\right) = 20 \cdot \log_{10}\left(\frac{V_{out}}{V_{in}}\right) = 20 \cdot \log_{10}\left(\frac{I_{out}}{I_{in}}\right) \tag{2.10}$$

Note that it in this case, no “m” is appended. The last two forms follow from the fact that power is quadratic in current and voltage.

The decibel is a convenient representation of very large or small numbers. Its logarithmic nature is also useful because multiplication turns into additions. For example, if a signal is transmitted through several components, their individual transmission coefficients have to be multiplied (neglecting multiple reflections). Hence, one can simply add the corresponding dB values. Similarly, one can subtract or add an attenuation or gain from an input power level in dBm to obtain the output power level.

Chapter 3

Microwave circuit components

The previous section covered some technical aspects of microwave techniques. We now turn to how these concepts can be harnessed for physics experiments. There is great fundamental and technological interest in measuring and manipulating at the nanoscale, particularly in the quantum coherent regime. To observe the dynamics of such systems one requires a detector with not only exceptional sensitivity but also a large wide bandwidth and low back action on the sample. Furthermore, one often needs to match high impedance devices to a transmission line without excessive reflections. Thus, microwave techniques are very relevant.

3.1 Tank circuits

As a widespread example often used in readout circuits, we study a so called tank circuit, which is essentially an LC resonator. By measuring the reflection coefficient, changes in impedance with varying inductance, capacitance, or resistance can be detected with high sensitivity. If the inductance and capacitance are varied, one speaks of dispersive readout because ideally no power is dissipated and only a phase shift occurs. Dispersive SQUIDs for example make use of a flux-dependent nonlinear inductor which forms a nonlinear resonator when shunted with a capacitor [6]. It is also possible to detect the quantum capacitance arising from the motion of a single electron, for example to dispersively read out quantum dot devices using in situ gate electrodes coupled to lumped-element resonators [7]. An even higher sensitivity to charges has been demonstrated using a tank circuit to impedance match a single electron transistor or quantum point contact (resistance ≈ 50 kΩ) to a 50 Ω system [8]. This technique enabled the detection of the presence or absence of a nearby single electron within less than 1 μs. A more traditional technological application of tank circuits is for tuning, such as in radio receivers or television sets, where they are used to select a narrow range of frequencies from the ambient radio waves.

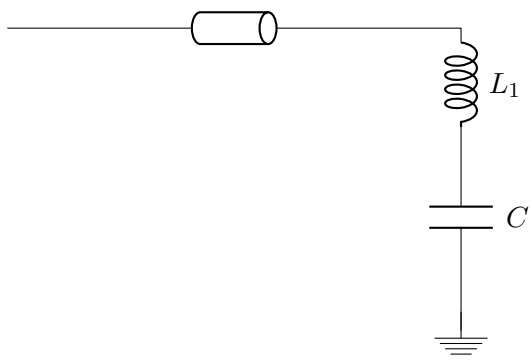

Figure 3.1: Wave reflection at a tank circuit on the end of a transmission line.

3.1.1 Ideal serial LC-tank circuit

Tank circuits are useful in both a serial and a parallel configuration. Here, the case of a serial tank circuit as shown in figure 3.1 is discussed, and we start out assuming that it consists of an ideal inductor and capacitor. To read out a tank circuit, it is typically connected to the end of a transmission line so that the reflection arising from the impedance of the tank circuit can be determined. If working in a low temperature environment, one would often use a cryogenic amplifier operated at liquid helium temperature in order to optimize the sensitivity.

Before, computing the reflection coefficient, we provide an intuitive picture. The impedances of the two components, $i\omega L$ and $1/i\omega C$, are purely imaginary and have opposite signs. At resonance ($\omega = \omega_0^2 = 1/LC$), their contributions to the total impedance $Z_A = i\omega L + 1/i\omega C$ exactly cancel out and the tank circuit acts as a short. For $\omega < \omega_0$ the capacitive impedance is dominant and the voltage of the incoming signal drops mostly across the capacitor. For $\omega > \omega_0$ the inductive impedance is dominant, and the voltage drops mostly across the inductor. Far off resonance, the impedance of either the capacitor (for low frequencies) or the inductor (for high frequencies) is much larger than Z_L, so that the tank circuit approximately correspond to an open and $R = 1$. Since the two components cannot dissipate any energy, the reflected wave must have the same amplitude as the incoming one, hence $|R| = 1$. If the frequency dependence of R is plotted in the complex plane, it thus describes a circle from $R = 1$ (off resonance) to R=-1 (resonance) to R=1, which corresponds to a 2π-phase shift. At resonance, the phase shift is π.

Formally, the reflection coefficient of such an ideal LC-resonator is given by

$$R(\omega) = \frac{Z_A - Z_L}{Z_A + Z_L}.$$

Again, it follows from the fact that Z_A is purely imaginary and Z_L is real that $|R| = 1$,

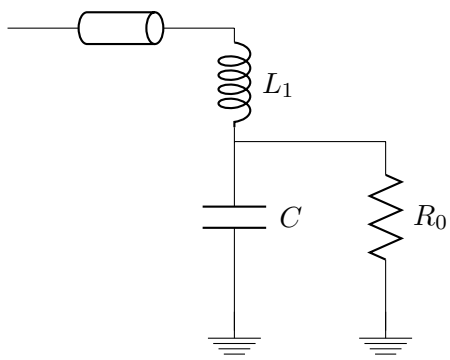

Figure 3.2: Impedance matching using a tank circuit. A small drive voltage on the input leads to a much larger oscillating voltage over L and C, thus enabling a large impedance R_0 connected there to absorb more power.

so that only the phase is relevant. Its frequency dependence is shown in figure 3.4

3.1.2 Using a tank circuit in experiments

The simplest way to use a tank circuit to gain useful information is to replace one of its components by a device to be probed. Typically, the device would be some microfabricated structure, such as a SQUID, Josephson junction, quantum dot or single electron transistor. Of course it is also possible to microfabricate the whole circuit. Any change of the inductance or capacitance of the device would shift the resonance frequency, which in turn leads to a change of the phase of the reflected wave. The circuit is most sensitive if driven at resonance, where the phase varies most strongly with frequency.

It is also possible to use a tank circuit to detect changes in a resistance R_0 whose typical value is very different from 50 Ω. If connected directly to a transmission line, the large mismatch would lead to nearly total reflection, nearly independent of R_0. The sensitivity to R_0 would thus be very poor. This situation can be remedied by using a tank circuit as an impedance matching element, similar to a transformer (figure 3.2). Its effect can be understood as follows: at resonance, the voltages across L and C are nearly equal but opposite, but they can individually be much larger than the drive voltage. Thus, R_0 sees a much larger voltage than it would without the tank circuit. As a result, it can absorb much more power, thus reducing the reflection. It turns out that with proper choice of parameters, the reflection can be eliminated entirely, and then depends very sensitively to the value of R_0. This way of using a tank circuit is particular interesting for quantum transport experiments, where the resistances are typically of the order of the inverse conductance quantum, $h/e^2 = 25.8$ kΩ, or higher.

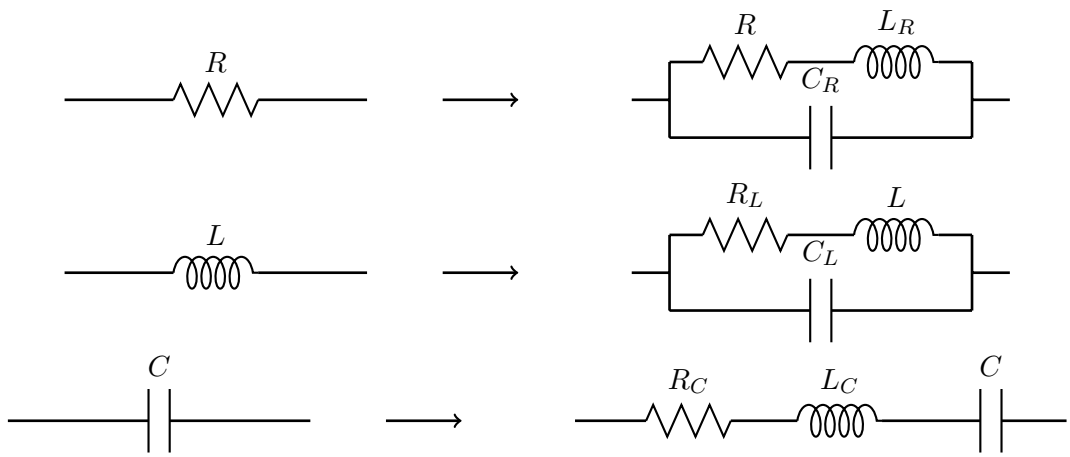

Figure 3.3: Equivalent circuit diagrams for a resistor, inductor and capacitor taking stray effects and internal resistances into account.

3.1.3 Effect of component imperfections

While simulating and dimensioning high-frequency circuits, one has to consider the non-ideal behavior of passive components at high frequencies. Hence, one uses the equivalent circuits shown in figure 3.3. The additional elements arise from the geometry of the components and are called parasitic or stray elements.

As a rough guide, the stray inductance is very roughly 1 nH per mm of length, and the stray capacitance is of the order of 20 fF per mm of size. These parasitic effects limit the frequency up to which components are useful. At some point, they become dominant over the ideal contribution of the component. One can minimize the parasitics by miniaturizing the components and avoiding connection lines by using surface mounted devices (SMD). Hence, the property of the passive components also depends on the soldering precision.

Furthermore, capacitors and inductors also have an effective series resistance (ESR), which causes some dissipation and results in a dip of $|R|$ at resonance (figure 3.4). This dip arises because a large current flow is only possible at resonance, where the total impedance of the ideal components vanishes. The reflection coefficient is then determined by the ESR. The right panel illustrates that for ESR-values larger than Z_L of the resistor (in this case $100\,\Omega$), the phase change is no longer 2π because the circuit always behaves more like an open than like a short. It is straightforward to compute the reflection coefficient including the parasitic effects underlying the plots in figure 3.4 from Kirchhoff's rules.

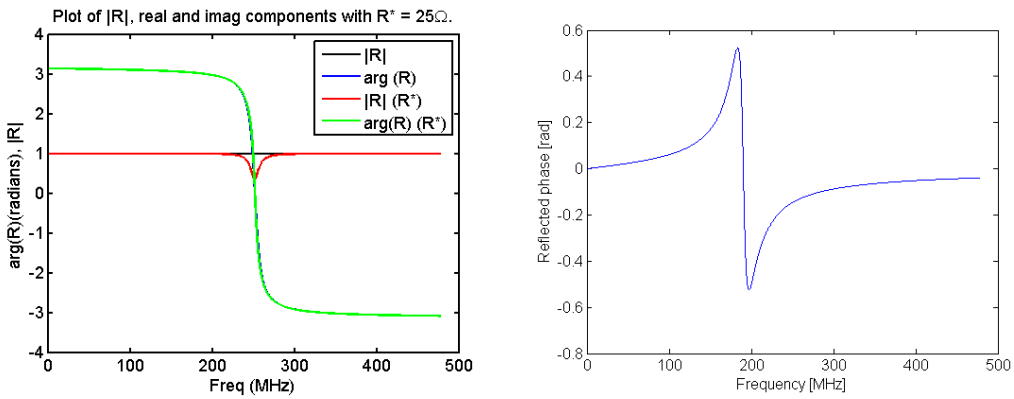

Figure 3.4: Left: Amplitude and phase of the reflection coefficient with and without ESR of 25 Ω, which is connected in series to the tank circuit. The 2π phase change curves (blue and green curve) are nearly indistinguishable. However there is a dip in the amplitude at resonance in the case that the circuit includes a resistor, whereas $|R| = 1$ at all frequencies for the ideal circuit. Right: An ESR of =100 Ω to the LC-circuit results in a phase change of less then 2π.

3.2 Frequently used microwave components

In this section, we discuss the function and most important parameters of attenuators, amplifiers, directional couplers and mixers. These are among the most frequently used components in microwave circuits, and will also be characterized used in the lab experiments. Furthermore, being familiar with them will help you to gain a basic understanding of the internal operating principle of a vector network analyzer, to be described in section 4.

3.2.1 Attenuator

An attenuator reduces the signal amplitude by some amount without reflection, thus dissipating the excess power. Therefore attenuators are impedance matched from both sides (low VSWR). They have a broad frequency range, and a minimal frequency dependence (dispersion), so practically no signal distortion. Attenuators can be implementation as a voltage-divider-like resistor network. Their most important parameter is the attenuation, i.e. their insertion loss:

$$\text{Attenuation [dB]} = 10 \cdot \log_{10} (\text{Incoming power}/\text{Outgoing power})$$

One common use is to suppress resonances, and to produce low power signals from a higher power source. In low temperature physics, attenuators placed at low temperature are very important to reduce room temperature noise. The VSWR is also a relevant figure of merit.

Figure 3.5: Attenuators

3.2.2 Amplifier

An amplifier is an active electronic device used for increasing the power of a signal. This is done by taking energy from a power supply and controlling the output to match the input signal shape but with a larger amplitude. Amplifiers are in most cases operated in the linear regime. Apart from their DC power supply inputs, amplifiers are usually two port devices.

The most common type of modern microwave amplifiers are based on high electron mobility transistors (HEMTs). For optimum sensitivity, special models can be operated at low temperature. Ultra-sensitive amplifiers based on superconducting electronics are a subject of current physics research.

The most important specifications for an amplifier are:

- The gain. For RF and microwave amplifiers, it is common to specify it as power gain in dB, i.e.

$$\begin{aligned} \text{Gain [dB]} &= 10 \cdot \log_{10} (\text{Output power/Input power}) \\ &= 20 \cdot \log_{10} (\text{Output voltage/Input voltage}) \,. \end{aligned}$$

  The gain is simply the S-parameter from input to output.

- The sensitivity, or more specifically the level of the noise added by the amplifier. There are several ways to specify it. The noise level (in $\mathrm{V}/\sqrt{\mathrm{Hz}}$) is most commonly used for low frequency amplifiers. A noise level of 1 $\mathrm{nV}/\sqrt{\mathrm{Hz}}$ means that the noise added by the amplifier is 1 nV rms for an integration time of 1 s. Mathematically, it is the square root of the (single sided) voltage noise spectral density, S_V. For cryogenic microwave amplifiers, one typically specifies the noise temperature T_N, which is the temperature (in K) at which a resistor with the same value as the line impedance (i.e. normally 50 Ω) produces the same amount of Johnson noise as the noise added by the amplifier. Hence,

$$S_V = k_B Z_L T_N .$$

  The usual factor 4 in the Johnson noise is not present because the load of the amplifier halves the voltage fluctuations of the resistor. For room temperature amplifiers, one can also use the noise temperature, but it is more common to specify the noise figure, defined as

$$\begin{aligned}\text{Noise figure [dB]} &= 10 \cdot \log_{10}\left(\frac{\text{Total noise from input load and amplifier}}{\text{input load noise}}\right)\\ &= 10 \cdot \log_{10}\left(\frac{T_N}{293\ \text{K}}\right),\end{aligned}$$

where the input load is again an impedance-matched resistor at room temperature (293 K).

- ◇ The isolation is the S-parameter (or insertion loss) in the reverse direction, also given in dB. It can be particular important for cryogenic amplifiers, where it is often undesirable to expose the signal source to room temperature noise coming from whatever is connected to the amplifier output. Thus, a high isolation (in absolute value) is needed.
- ◇ The VSWR at input and output, indicating how much of an incoming wave is reflected.
- ◇ The maximum input power. Typically, one specifies the 1dB compression point, which is the input power level at which the gain is reduced by 1 dB.

3.2.3 Directional coupler

Figure 3.6: Directional coupler

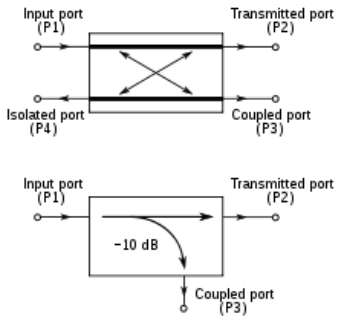

Figure 3.7: Circuit diagram of a directional coupler.

A directional coupler is a passive four port device that separates signals based on their propagation direction. One of its four ports is regarded as the input, one is regarded as the "transmitted" or output port (where most of the incident signal exits), one is regarded as the "coupled" port (where a fixed fraction of the input signal appears, usually expressed in dB), and one is regarded as the "isolated" port, which is usually terminated so that any signal emitted there is absorbed without reflection. The corresponding ports are shown in figure 3.7. If the signal is reversed so that it enters the "transmitted" port, most of it exits the "input" port, but the split-off part is dissipated at the terminated isolated port

instead of arriving at the coupled port. If the signal going from input to output is of the form

$$V = V_+(x - vt) - R \cdot V_-(-x - vt)$$

the directional coupler thus produces an attenuated version of V_+ on the coupled port and of V_- on the isolated port. All four ports are (ideally) impedance matched, and the circuit is (ideally) lossless. Directional couplers can be realized in microstrip, stripline, coax and wave guide.

The most important parameters are the amount of coupling and the directivity, which specifies the ratio between the powers at the coupled and the isolated ports for a signal arriving at the input, or equivalently the ratio of input and output signals for a signal source connected to the coupled port. Ideally, this directivity would be zero (infinity if expressed in dBm).

One common use of a coupler is for sampling a signal. For example to measure its power, while transmitting most of it to its destination. It is also very convenient for reflection measurements, where the excitation is added to the coupled port and the power reflected by a device on the input is (mostly) sent to an amplifier at the output.

3.2.4 Mixer

An ideal mixer produces the product of two input signal at its output In contrast to the components discussed so far, it is thus a nonlinear device. It's primary use is to shift the frequency of a signal. In practice a mixer is realized through non-linear components such as diodes. For technical reasons, the output is only linear in one of the input signals, while the other one should be supplied at a fixed power (often 10 to 16 dBm). The latter signal typically serves as a frequency reference and is called "local oscillator". The corresponding port is always used as an input. The remaining two ports are called RF and IF (for radio-frequency and intermediate frequency) and signals can be transmitted between them in both ways.

Now let one of these signals be a modulated carrier $A(t) \cdot e^{i\omega_s t}$. After it is multiplied to a local oscillator signal with frequency ω_{LO}, the product at the output is

$$\begin{aligned}
\mathrm{Re}\left(A(t)e^{i\omega_s t}\right) \cdot \mathrm{Re}\left(e^{i\omega_{LO}}\right) &= \frac{A(t) \cdot e^{i\omega_s t} + A(t)^* \cdot e^{-i\omega_s t}}{2} \cdot \frac{e^{i\omega_{LO} t} + e^{-i\omega_{LO} t}}{2} \\
&= \frac{1}{2}\mathrm{Re}\left(A(t) \cdot e^{i(\omega_s + \omega_{LO})t}\right) + \frac{1}{2}\mathrm{Re}\left(A(t) \cdot e^{i(\omega_s - \omega_{LO})t}\right).
\end{aligned}$$

(Note that it is necessary here to explicitly take the real part to obtain the physical signal of a complex expression before multiplying.) We see that the original signal is replicated

at two frequencies that are the sum and difference with the local oscillator frequency.

There are two primary ways to use a mixer. For upconversion, a low frequency signal (possibly base band, i.e. reaching down to DC) is applied to IF, and high frequency replicas (so called side bands) appear around the (typically much higher) local oscillator frequency. For example, one could thus encode an audio signal in a microwave signal for radio transmission, or use a computer generated low frequency control signal to shape the microwave pulse applied to an experiment. The second configuration for downconversion works the other way around. A high frequency signal (usually not too far from ω_{LO}) is applied to RF, and appears with a frequency $|\omega_S - \omega_{LO}|$ at the IF port. In this case, the sum frequency will normally be filtered out. This demodulation could serve to recover our original audio signal at the receiving station, or to analyze the microwave signal reflected by a device.

It is worth pointing out that if $\omega_{LO} = \omega_s$, the IF signal will be at DC. Thus, one can use a DC input signal at IF to control the RF amplitude, or obtain the in-phase component (w.r.t. ω_{LO} of an incoming signal at RF as a DC voltage on IF. By adding a 90∘, phase shift, the out-of-phase component can also be obtained.

Figure 3.8: A typical mixer

Chapter 4

Microwave measurements with a vector network analyzer (VNA)

4.1 Introduction

We have finally laid all the foundations for discussing a network analyzer, the measurement instrument that will be used in this lab. Network analyzers characterize the reaction of a circuit to a stimulation by measuring the complex scattering parameters. In contrast to an oscilloscope, which measures a time-resolved signal, the signal is measured in the frequency domain. Next to the spectrum analyzer, it is the most essential instrument in microwave engineering. A spectrum analyzer uses Fourier transform to determine the frequency spectrum of an arbitrary signal. While spectrum analyzers are mainly used to measure signal characteristics such as carrier level, side bands, harmonics and phase noise, network analyzers are used to characterize components, devices, circuits, and subassemblies. One distinguishes between scalar and vector network analyzers. A scalar network analyzer measures only the absolute value of a gain or loss with simple power detectors. Vector network analyzers (VNAs) additionally measure the phase, thus obtaining the full transmission or reflection coefficient.

In the next section, the basics of a linear network analysis are explained. It is followed by the general working principle of a vector network analyzers. Finally, the vector network analyzer E5071C from Agilent is presented and the main operating elements are explained for use in the lab.

4.2 Linear network analysis

A network, in the context of electronics, is a collection of interconnected components. Network analysis is the process of finding the voltages across, and the currents through every component in the network. We only consider the most common case that the

Figure 4.1: Vector Network Analyzer

components of the network are all linear. A network is linear if its outputs are linear functions of its inputs.

A linear network supplied with a sinusoidal incoming signal produces a sinusoidal signal of the same frequency, but it can differ in amplitude and phase. Nonlinear networks can also generate higher harmonics of an input signal or mix two signals. An example is the mixer, discussed in 3.2.4. A linear network is fully described by the S-parameters, defined in section 2.2.4. A VNA measures these S-parameters. VNAs typically have two or four ports.

4.3 Measurement principle

We briefly discuss how an n-port VNA can determine the complete S-matrix (i.e., all S-parameters) of a device, which the complex reflection coefficients on all ports, as well as the complex transmission coefficients between all ports. If only one port is available, the scattering matrix reduces to S_{11}. For a two port VNA, the scattering matrix consists of four elements:

$$b_1 = S_{11}a_1 + S_{12}a_2 \tag{4.1}$$

$$b_2 = S_{21}a_1 + S_{22}a_2 \tag{4.2}$$

S_{11} and S_{22} are the complex reflection coefficients of both ports and S_{21} and S_{12} are the complex transmission factors between the ports. $a_{1,2}$ and $b_{1,2}$ are the amplitudes of the incoming and outgoing waves, respectively. Determining the elements of the matrix requires four measurements in total. First a signal is produced at port 1 ($a_2 = 0$) and b_1 and b_2 are measured. Hence S_{11} and S_{21} are obtained. Then a_1 is set to zero and the signal is connected to port 2. Measuring b_1 and b_2 now yields S_{12} and S_{22}. In each case, the applied signal is sinusoidal, and the measurement is repeated at many different frequencies. An n-port VNA proceeds accordingly with more ports, with power being applied to only one port at a time. Of course, it is not always necessary to measure all the components of the S-matrix. Remember that the elements of the scattering matrix are always referred to a specific line impedance.

4.4 Components of a VNA

A VNA can be grouped into the following components (figure 4.2):

- Signal generator.
- Components to separate the incoming and reflected wave. Key elements are directional couplers.
- A receiver group that down-converts and demodulates the received signal.
- Digital signal processing and a display of the measured data.

The schematic of a vector network analyzer is shown in figure 4.2. A tunable signal generator is used as signal source. The separation of the incoming and the reflected wave is achieved with directional couplers, explained in section 3.2.3. The measured signal is then down-converted in several stages to DC using mixers, so that both the in-phase and out-of phase components (i.e. real and imaginary part) can be extracted and digitized. Between the two mixing stages used for downconversion, the signal is filtered to a narrow band, which provides the desired frequency selectivity and sets the so called intermediate frequency bandwidth (IFBW). By adjusting it, a tradeoff between sensitivity and speed can be made. Modern network analyzers can present the data in various formats. Among these are a logarithmic plot of the amplitude of the scattering parameter, it's phase, and it's trajectory in the complex plane.

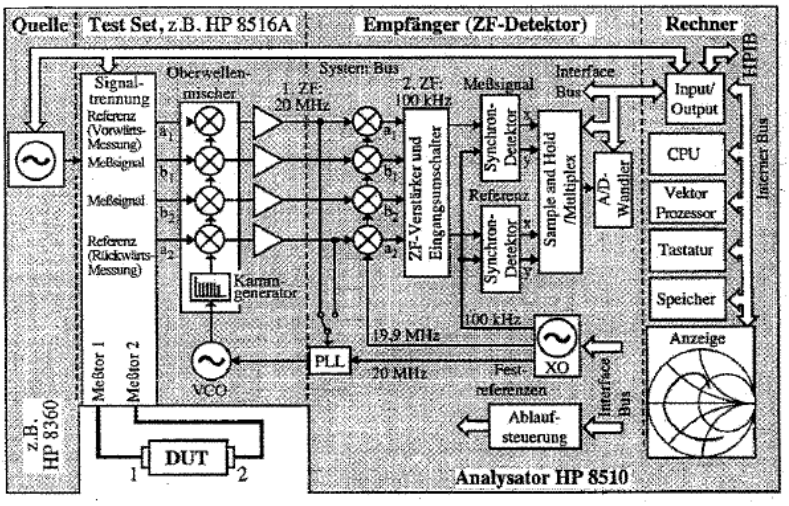

Figure 4.2: Schematic of a VNA.

4.5 The Agilent E5071C - Network Analyzer

The two vector network analyzers E5071C that will be used during the experiment cover a frequency range of 250 kHz to 8.5 and 20 GHz, respectively, and have two ports.

The user interface is divided in different blocks, as shown in figure 4.3. These group related properties that can be accessed via the soft keys on the right side of the touch screen.

- *Entry Block*
  In this block the numeric inputs are accomplished. Among these is a numeric block with a correction button, and buttons for different units. Parameters can be changed continuously with a rotary knob which can be also used to shift the position of a marker.

- *Response Block*
  The functions of the receiver and the digital data processing can be found in this block. Among these are also features to calibrate the analyzer, and evaluation of the measurement results.

- *Stimulus Block*
  Here the generator settings can be entered, for example frequency range and the number of measurement points. The transmitting power and the trigger mode of the generator can also be set here.

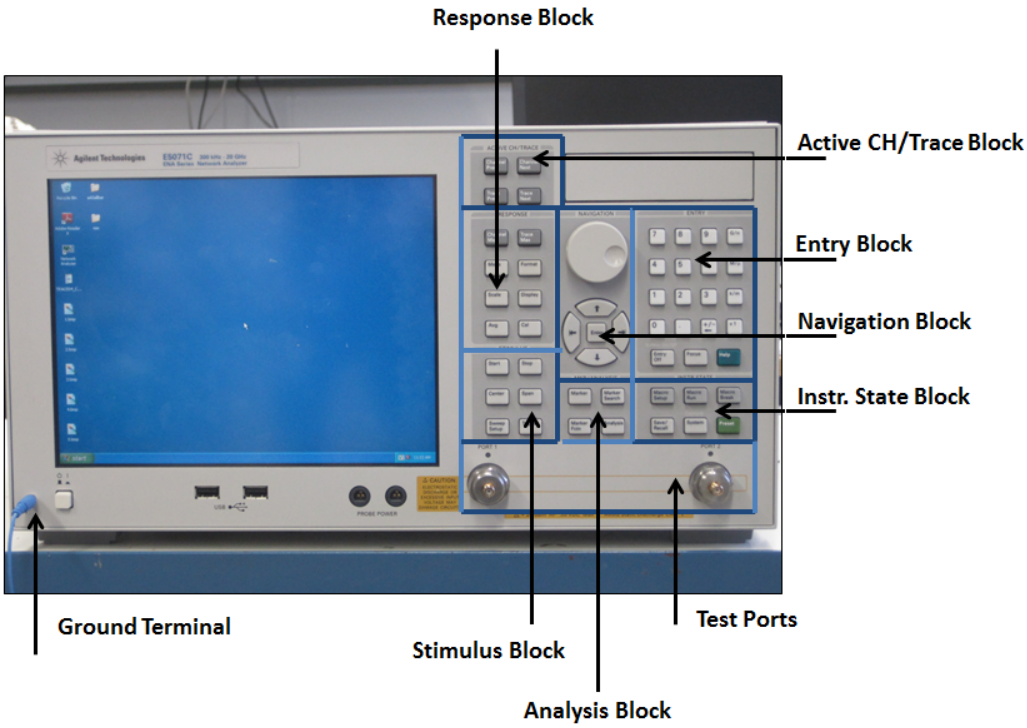

Figure 4.3: Front panel and input keys of the VNA E5071C

4.6 Operating parameters

The most important operating parameters are the measuring range, the frequency resolution, and the output power of the generator. These parameters can be set in the *stimulus block*. The frequency range can also be set with the buttons START and STOP or with the buttons CENTER and SPAN. The number of measuring points defines the frequency resolution. This, as well as the output power, can be reached using the MENU button, using the soft keys NUMBER OF POINTS or POWER. Furthermore, in this menu the trigger settings can be found. The trigger can be in the state CONTINUOUS, where the analyzer continuously makes new measurements. Other modes are SINGLE for a single measurement and HOLD to hold the actual measurement results. Other parameters worth mentioning are the IFBW (intermediate frequency) bandwidth and the sweep time. The former is the inverse averaging time for each data points. A lower value reduces the noise, but slows down the measurement. To obtain independent data points, the measurement time per point should be at least as long as the averaging time. This is automatically the case if the sweep time is set to automatic. The way the data is displayed can be changes with the FORMAT button.

4.7 VNA Step by Step

To better understanding how to use the E5071C, this section describes the basic measurement procedure using the E5071C and presents an example of the transmission measurement of a lowpass filter.

Measurement Example of a Bandpass Filter

This section describes how to measure the transmission characteristics of a 1.9 MHz lowpass filter. The measurement conditions for this measurement example are those suitable for a 1.9 MHz lowpass filter. To measure another device under test (DUT), change the measurement conditions to suit the particular DUT.

STEP 1. Determining Measurement Conditions

1. Preset the E5071C.

$$\text{Preset} > \text{OK}$$

2. Set the S-parameter to S21.

$$\text{Meas} > \text{S21}$$

When measuring the reverse transmission characteristics, set the S-parameter to S12.
3. Set the data format to the log magnitude format

$$\text{Format} > \text{Log Mag}$$

4. Set the start frequency to the minimum value(300KHz). Next, specify the stop frequency, which is set to 10 MHz in this measurement example.

$$\text{Start} > 3 > 0 > 0 > \text{K/m}$$
$$\text{Stop} > \text{q} > 0 > \text{M/m}$$

When entering the frequency unit using the keyboard, type "G" for GHz, "M" for MHz, and "k" for kHz.
5. Specify the number of measurement points per sweep. The number of measurement points in this measurement example is set to 401.

Sweep Setup > Points > 4 > 0 > 1 > x1

6. Specify the power level of the signal source. The power level in this measurement example is set to -10 dBm.

Sweep Setup > Power > +/- > 1 > 0 > x1

7. Specify the IF bandwidth of the receiver as necessary. In this measurement example, the IF bandwidth is set to 10 kHz because of the need to lower the noise floor.

Avg > IF Bandwidth > 1 > 0 > k/m

STEP 2. Connecting the Device Under Test (DUT)

1. Connect to the DUT to the E5071C. (See the below figure)

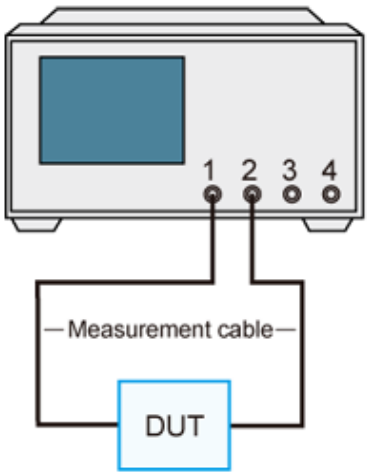

Figure 4.4: connect DUT to port 1 and 2; OUR VNA in lab has only 2 ports

2. Set the appropriate scale by executing the auto scale.

Scale > Auto Scale

You can also adjust the scale by entering arbitrary values in the Scale/Div button, Reference Position button, and Reference Value.

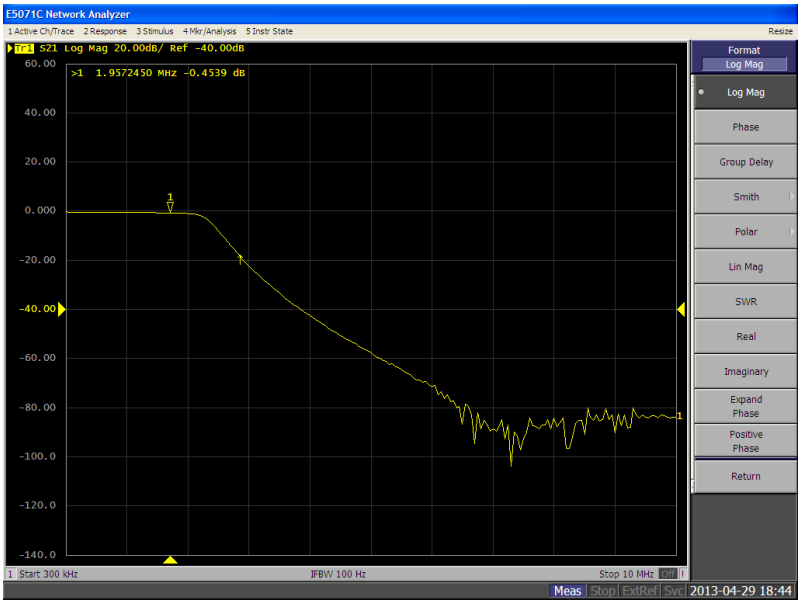

Figure 4.5: S21 Trace after executing Auto scale

STEP 3. Analyzing Measurement Results

This section describes how to use the marker function to read out important parameters for the transmission measurement of the lowpass filter (-3 dB bandwidth).
1. Display a marker.

Marker > Marker 1

2. Turn the rotary knob on the front panel to move marker. Move the marker until insertion loss(S21) becomes -3. This point is the (3dB) bandwidth of the filter.

STEP 4. Outputting Measurement Results (Save)

You can save not only the internal data but also the measurement results such as trace data and display screens to the disk .

Saving the Trace Data(in CSV format) You can save the trace data to the disk of the E5071C in CSV file format (extension: .csv). Since the CVS-formatted data to be saved is a text file, you can analyze the data using Microsoft Excel.
Follow the step below to save the trace data:

Save/Recall > Save Trace Data

Saving the Display Screen You can save the screen displayed on the E5071C to the disk of the E5071C in Windows bitmap file format (extension: .bmp) or Portable Network Graphics format (extension: .png).
Follow the step below to save the display screen:

System > Dump Screen Image

The image on the LCD display memorized in the volatile memory (clipboard) (the image on the LCD display when the Capture/System key is pressed) is saved.

Chapter 5

ESD Protection

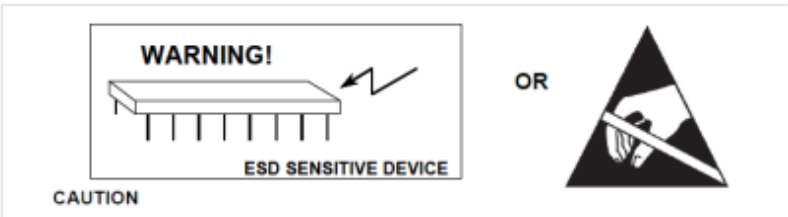

Figure 5.1: ESD caution! Many electronic devices are sensitive to ElectroStatic Discharges(ESD) and can damge severely. ESD protection techniques prevent damages.

Charge Build up

The charge at the surface of any material is generally neutral, i.e. neither positive nor negative, unless some energy is imparted to the surface causing an imbalance of electrons to occur and producing a local charge (negative or positive depending on the material). Charge builds up through energy being imparted to the material, this can happen either via mechanical means (other materials and surfaces in direct contact, rubbing or sliding against other materials) or through charge induced through external high fields. Note that the charge will eventually leak away but does so very slowly for insulating materials and very quickly for conducting materials.
ESD voltages can easily reach thousands of volts. In dry air, voltages of over 10kV have been recorded generated by human beings wearing nylon clothes and rubbing against polyester materials.

How ESD can injure semiconductor devices?

ESD events generate high voltages and high currents depending on the path the charge takes to go to ground. If not properly bypassed, the voltages cause immediate oxide dielectric breakdown, specially in advanced geometry technologies with thin gate oxides

creating a weak spot in the oxide which allows current flow and localized heating, depending on the current flow this could cause permanent damage caused by overheating and melt the silicon creating a permanent short or high leakage sites. High currents can also cause junction or metal failure. In short, ESD failures can be caused by oxide breakdown, junction burnout or metallization failure due to excess current. All ESD-sensitive devices are shipped in protective packaging. ICs are usually contained in either conductive foam or antistatic shipping tubes, and the container is then sealed in a static-dissipative plastic bag.
Several personnel handling techniques are keys to minimizing ESD-related damage. At the workstation, a conductive wrist strap is recommended while handling ESD-sensitive devices. The wrist strap ensures that normal tasks, such as peeling tape from packages, won't cause any damage. A 1 MΩ resistor, from the wrist strap to ground, is required for safety.

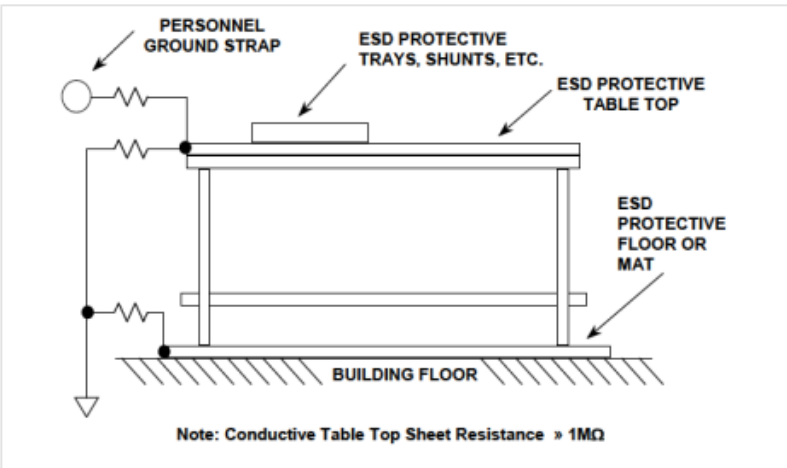

Figure 5.2: Standard workbench for ESD sensitive devices. A key component required for ESD-safe component handling is a workbench with a static-dissipative surface. The surface is connected to ground through a 1 MΩ resistor, which dissipates any static charge, while protecting the user from electrical ground fault shock hazards.

Special Notes about ESD and RF tools

Most of the RF tools have an amplifier at the input. Adding ESD protection circuits to amplifiers makes them noisier and not suitable for measurements. So it is very important to make sure you are grounded properly and there is no excess charge to transfer to device.

- always connect yourself to ground with Grounding wrist strips.The Grounding wrist has a resistivity of 1MΩ to ground.

There is a dissipative epoxy on floor of Lab, which is connected to electrical ground at the edges, this also prevent charge buildup when you walk in the lab.

- don't touch inner conductor of RF amplifiers and measurement tools. if you are going to connect cable make sure there is a ground path from inner conductor to Ground(for example many times an attenuator is connected) if there is no path to ground with help of conducting object temporarily connect inner conductor to ground to discharge any unwanted excess charges.

Chapter 6

Guidelines for Experiments

The philosophy of this lab is that you apply and explore the theoretical background. Figuring out what to do exactly is part of your task. You will first characterize a number of components using a VNA, including cables, a directional coupler and an amplifier. Furthermore, you will study the behaviour of a tank circuit and have a chance to build your own. In the second part, you will assemble the components into a reflectometry readout setup which is suitable for low-temperature measurements and which can achieve a higher sensitivity than the VNA alone.

The following guidelines are suggestions for how to proceed and what to measure, but you are also welcome to shift the focus to different aspects. In any case, you will have to develop some creativity and initiative for filling in the details.

Test an open, shorted, and 50 Ω-terminated coaxial cable.

Connect a low-loss cable to the VNA and measure both amplitude and phase. Explain what you see. From the data, estimate the wave velocity in the cable. Therefore one can now estimate the cable length. Make sure you understand the effects of the different terminations.

Characterize three different coaxial cables.

Measure the attenuation of three different coaxial cables (stainless-steel, low-loss, and RG174). Compare the results to theory and data sheets for the cables.

Characterize a directional coupler and an amplifier.

Measure the operating frequency range, coupling and directivity of the coupler and compare them to the data sheet. In a next step the amplifier is connected and supplied with an external power source. The amplifier gain and the input VSWR should be obtained

and the effect of the input power level on the gain should be observed. Also determine the isolation.

Characterize and compare your own serial/parallel LC-resonator to a more ideal model.

Solder your own serial or parallel LC-resonator and determine its properties. The resonance frequency should be approximately 2 GHz. Why is the behaviour more complicated than you might expect? Can you improve it? Compare it with a more ideal resonator provided. Think about what terminations are reasonable for their second port, and verify your expectations. The transmission should also be measured. Should $T = 1 + R$ hold? If not, why? In each case, consider both amplitude and phase and explain what you see.

Implementing the resonator into a low-noise setup.

Measuring is at the heart of experimental physics. In order to measure a property, one must construct a setup that provides an easily measurable quantity that depend on the property to be determined. Using some form of oscillator and considering its frequency or phase is a prime example. one can measure the actual property. A basic case is measuring the gravitational constant with a pendulum. Among other modern examples are RF-SQUIDs and qubit readout methods, which employ the microwave techniques studied here.

Three components are supplied in this experiment: An LC resonator, a coupler, and an amplifier. Your task is to design a measuring setup that reads out the phase of the reflected signal from an LC resonator with the following (imagined) constraint: The LC-resonator is deep in a cryostat at 4 K or lower, and the RF cables are connected to the resonator with room temperature electronics (in this case the VNA). In order to minimize low thermal conduction of the cables, one has to use steel cables with high loss. Furthermore, imagine that our LC resonator is a nano-electronic device whose interesting behaviour is destroyed when too much power is applied. Hence, try to minimize the power needed to perform the experiment.

Bibliography

[1] David M. Pozar. Microwave engineering. 2005. Cited on page 1.

[2] Louis E. Keiner. Cited on page 1.

[3] Agilent Technologies. Agilent network analyzer basics. 2004.

[4] Wikipedia. Cited on page 6.

[5] Robert E. Collin. Grundlagen der mikrowellentechnik. 1973. Cited on pages 6, 7, and 9.

[6] M. Hatridge, R. Vijay, D. H. Slichter, John Clarke, and I. Siddiqi. Dispersive magnetometry with a quantum limited squid parametric amplifier. *Phys. Rev. B*, 83:134501, Apr 2011. Cited on page 17.

[7] Hornibrook JM Doherty AC Lu H Gossard AC Reilly DJ Colless JI, Mahoney AC. Dispersive readout of a few-electron double quantum dot with fast rf gate sensors. *Physical Review Letters*, 110, Jan 2013. Cited on page 17.

[8] D. J. Reilly, C. M. Marcus, M. P. Hanson, and A. C. Gossard. Fast single-charge sensing with a rf quantum point contact. *Applied Physics Letters*, 91(16):162101, 2007. Cited on page 17.

[9] Microwaves101.

Data Sheets

Coaxial

Low Pass Filter

BLP-1.9+

50Ω DC to 1.9 MHz

Maximum Ratings

Operating Temperature	-55°C to 100°C
Storage Temperature	-55°C to 100°C
RF Power Input	0.5W max.

Permanent damage may occur if any of these limits are exceeded.

Features

- rugged shielded case
- other standard and custom BLP models available with wide selection of fco

Applications

- test equipment
- lab use
- video equipment

CASE STYLE: FF55

Connectors	Model	Price	Qty.
BNC	BLP-1.9+	$34.95 ea.	(1-9)

+ RoHS compliant in accordance with EU Directive (2002/95/EC)

The +Suffix has been added in order to identify RoHS Compliance. See our web site for RoHS Compliance methodologies and qualifications.

Low Pass Filter Electrical Specifications

PASSBAND (MHz)	fco (MHz) Nom.	STOPBAND (MHz)		VSWR (:1)	
(loss < 1 dB)	(loss 3 dB)	(loss > 20 dB)	(loss > 40 dB)	Passband Typ.	Stopband Typ.
DC-1.9	2.5	3.4-4.7	4.7-200	1.7	18

1 dB compression at +13 dBm input power

Outline Drawing

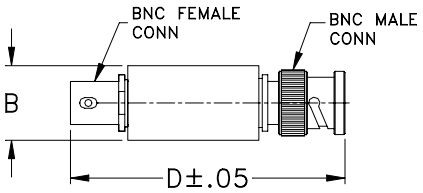

Outline Dimensions (inch / mm)

B	D	wt
.54	2.59	grams
13.72	65.79	40.0

typical frequency response

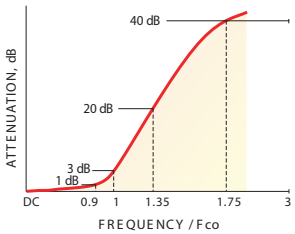

electrical schematic

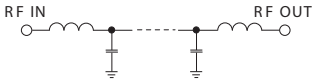

Typical Performance Data

Frequency (MHz)	Insertion Loss (dB) x̄	Insertion Loss (dB) σ	Return Loss (dB)	Frequency (MHz)	Group Delay (nsec)
0.10	0.09	0.01	40.00	1.00	390.94
1.20	0.24	0.02	22.11	1.00	393.92
1.40	0.26	0.01	23.88	1.10	397.21
1.60	0.31	0.01	26.19	1.10	400.27
1.80	0.40	0.02	21.19	1.20	406.34
1.90	0.45	0.02	21.37	1.30	410.76
2.10	0.75	0.12	15.39	1.30	417.77
2.30	2.93	0.75	5.05	1.40	425.39
2.50	8.32	1.21	1.43	1.40	434.33
2.70	14.69	1.17	0.59	1.50	444.37
2.80	17.71	1.12	0.45	1.60	455.27
3.00	23.30	1.01	0.32	1.60	468.79
3.10	25.89	0.96	0.29	1.70	484.50
3.30	30.68	0.90	0.24	1.80	506.65
3.40	32.92	0.87	0.22	1.90	554.15
3.60	37.12	0.84	0.20	1.90	579.78
3.80	41.00	0.81	0.18	2.00	642.41
4.00	44.61	0.79	0.17	2.10	720.76
4.30	49.67	0.81	0.15	2.20	779.41
4.50	52.78	0.80	0.14	2.30	768.87
4.70	55.74	0.88	0.13	2.40	675.19
5.00	60.00	0.86	0.11	2.50	579.64
29.40	92.50	4.17	0.17	2.70	390.84
53.80	91.19	3.63	0.42	2.80	286.22
78.10	92.39	2.10	0.45	3.00	230.56
102.50	87.80	2.75	0.46	3.10	182.81
126.90	89.05	3.87	0.47	3.30	153.96
151.30	87.17	2.60	0.46	3.40	132.22
175.60	92.87	7.14	0.44	3.60	109.19
200.00	86.82	4.04	0.44	3.80	92.80

INSERTION LOSS

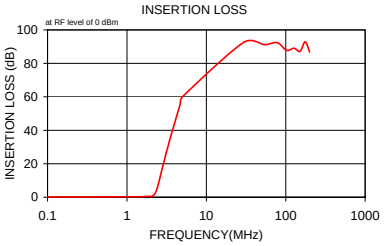

RETURN LOSS

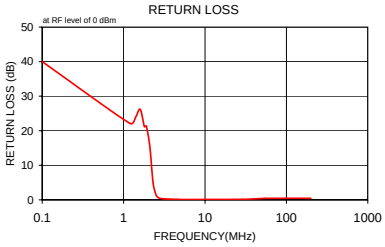

GROUP DELAY

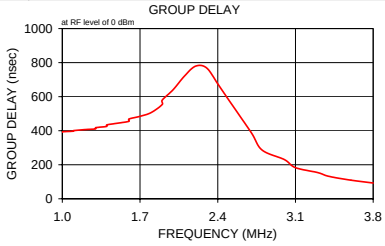

REV. B
M108294
BLP-1.9+
090818

Microwave Electronic Components of America

MECA ELECTRONICS, INC.

www.e-meca.com

MECA Directional Coupler: 780-dB-2.500

Print This Page

780 Series - MECA offers a miniature, 50 watt (2kW peak), SMA-Female single directional stripline RF coupler ideal for space restricted applications where precise monitoring, external leveling, signal mixing or swept transmission and reflection measurements are necessary. Nominal coupling values of 10 dB.

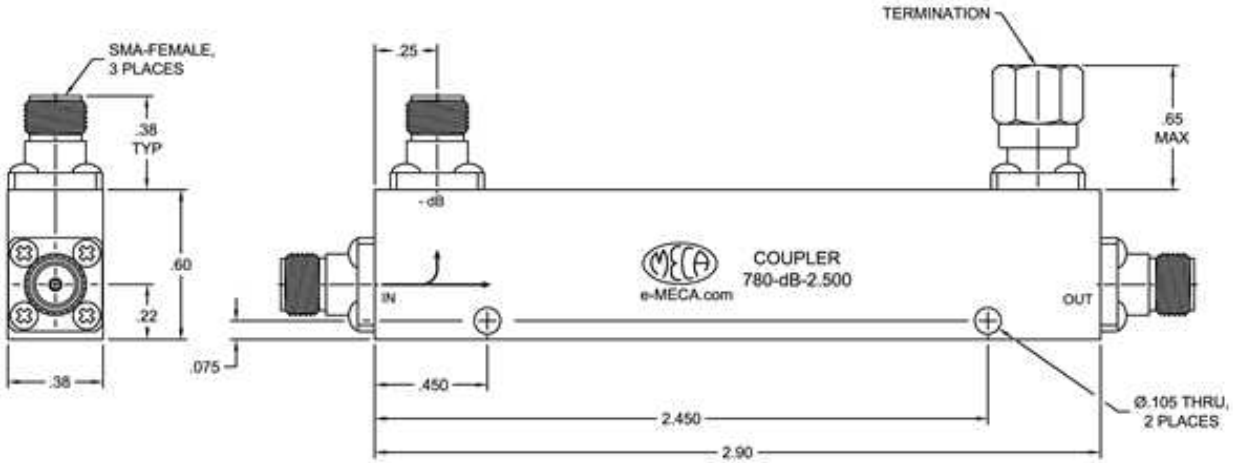

ELECTRICAL SPECS

Frequency	1.000 - 4.000
Coupling Variation (Total)	± 1.00
Insertion Loss	0.40 dB
Directivity (Min)	23 dB
VSWR (Max)	1.20:1
Average. Power	50
Peak Power	2000

PART NO.	COUPLING (dB) (NOMINAL)	INSERTION LOSS (dB) (MAX)	POWER RATING (WATTS)	
			FORWARD	REVERSE
780-06-2.500	6	0.35	50	2
780-10-2.500	10	0.35	50	5
780-20-2.500	20	0.40	50	50
780-30-2.500	30	0.40	50	50

MECHANICAL SPECS

Connectors	Stainless Steel Passivate
Pin	Beryllium Copper Gold Plate
Housing	Aluminum, Clear Iridite
Insulator	PTFE Virgin Electrical Grade
Operating Temp.	-55° C to +85° C

Lead Free

This document gives only a general description of the product(s) and shall not form part of any contract. Please contact a MECA Applications Engineer for the most current specification drawing.

MECA Electronics, Inc. 459 East Main Street, Denville, NJ 07834
Toll Free: (866) 444 - 6322 • Phone: (973) 625 - 0661 • Fax: (973) 625 - 9277 • sales@e-MECA.com

RG Koaxial-Kabel 50 Ω

RG coaxial cable 50 Ω

nach UL-Standard MIL C 17

acc. to UL-Standard MIL C 17

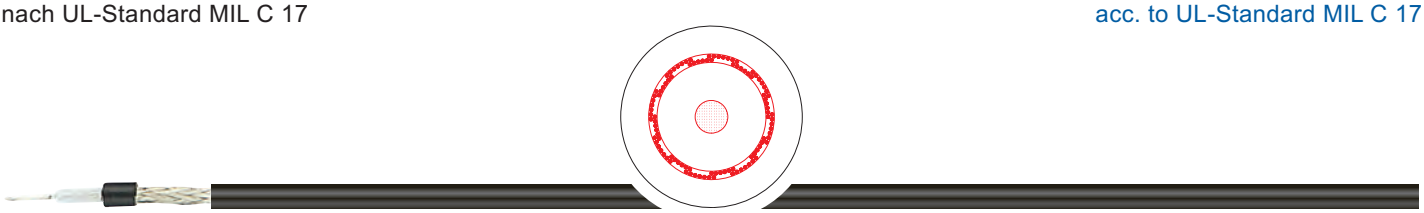

Anwendung

als hochwertige Koaxial-Kabel zur Übertragung von hochfrequenten Messwerten, Daten und Signalen mit definierten Wellenwiderständen und engen Fertigungstoleranzen in 50 Ω Ausführung. Einsatz in nahezu allen Bereichen der Industrie- und Unterhaltungselektronik, in IT-Anlagen und von Sende- und Empfangsanlagen.

Application

high quality coaxial cable for transmission of high frequent measured data and signals with defined charecteristic impedance and tight production tolerances in 50 Ω. For use in most fields of industries and consumer electronics, in IT-systems and transmitter and receiving systems.

Besonderheiten

- Ausführung nach US-Standard MIL C 17
- Einsatz von genormten Steckverbindern möglich

Special features

- designed according US-Standard MIL C 17
- use of approved connectors is possible

Hinweise

- RoHS-konform
- weitere Ausführungen und Sonderausführungen auf Anfrage.

Remarks

- conform to RoHS
- further types and special types upon request.

Aufbau / Structure

	RG58 C/U	RG 174 A/U	RG 213 /U	RG 223 /U
Innenleiter inner strand	Cu-Litze verzinnt copper strand tinned	Staku blank Staku blank	Cu-Litze blank bare copper strand	Cu-Litze verzinnt copper strand tinned
Leiteraufbau/strand structure	19 x 0,18 mm	7 x 0,16 mm	7 x 0,75 mm	1 x 0,89 mm
Isolation/isolation	PE	PE	PE	PE
Isolationsdurchmesser insulation diameter	2,95 mm	1,52 mm	7,24 mm	2,95 mm
Außenleiter outer conductor	CuG verzinnt CuG tinned	CuG verzinnt CuG tinned	CuG blank CuG blank	2 x CuG versilbert 2 x CuG silvered
Außenmantel/outer sheath	PVC	PVC	PVC	PVC
Mantelfarbe/sheath colour	schwarz/black	schwarz/black	schwarz/black	schwarz/black
Außendurchmesser outer diameter	4,85 mm	2,8 mm	10,0 mm	5,38 mm

Technische Daten / Specifications

Wellenwiderstand characteristic impedance	50 ± 2 Ω	50 ± 2 Ω	50 ± 2 Ω	50 ± 2 Ω
Frequenzbereich/frequence	3 GHz	3 GHz	3 GHz	12,4 GHz
Dämpfung bei +20°C subdue on +20°C				
bei/on 10 MHz	4,5 dB/100 m	9,5 dB/100 m	1,8 dB/100 m	4,0 dB/100 m
20 MHz	6,5 dB/100 m	13,5 dB/100 m	2,7 dB/100 m	5,8 dB/100 m
50 MHz	10,4 dB/100 m	21,6 dB/100 m	4,4 dB/100 m	9,3 dB/100 m
100 MHz	15,1 dB/100 m	30,9 dB/100 m	6,4 dB/100 m	13,5 dB/100 m
200 MHz	21,9 dB/100 m	44,4 dB/100 m	9,5 dB/100 m	19,7 dB/100 m
500 MHz	36,6 dB/100 m	72,3 dB/100 m	16,0 dB/100 m	32,8 dB/100 m
800 MHz	48,1 dB/100 m	93,3 dB/100 m	21,2 dB/100 m	43,0 dB/100 m
1000 MHz	54,8 dB/100 m	105,5 dB/100 m	24,2 dB/100 m	49,0 dB/100 m
Betriebsspannung max. operating voltage max.	1,4 kVeff	1,1 kVeff	3,7 kVeff	1,4 kVeff
Schleifenwiderstand max. loop resistance max.	53 Ω/km	360 Ω/km	10 Ω/km	36 Ω/km
Kapazität ca./capacity app.	101 pF/m	101 pF/m	101 pF/m	101 pF/m
Verkürzungsfaktor conversion factor	0,66 v/c	0,66 v/c	0,66 v/c	0,66 v/c
Kleinster Biegeradius min. bending radius	25 mm	15 mm	50 mm	25 mm
Betriebstemperatur operating temperature	-35 °C / +80 °C	-35 °C / +80 °C	-35 °C / +80 °C	-35 °C / +80 °C
Gewicht ca. weight app.	36 kg/km	12 kg/km	152 kg/km	56 kg/km

Semi Rigid Coaxial Cable - Stainless Steel 304 / Beryllium Copper SCBsrc02

Product Data Sheet

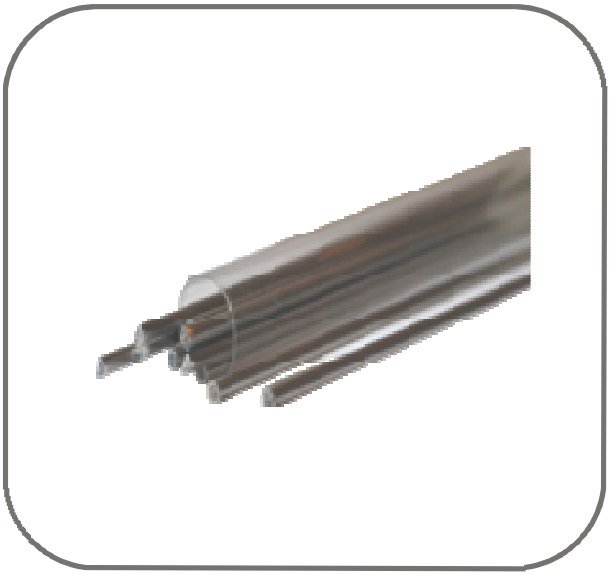

For use at microwave frequencies, this semi-rigid coaxial cable is available in straight lengths of 1, 2 or 3 meters (2m on stock), with either stainless steel or beryllium

Mechanical Characteristics	
Outer Conductor Diameter, inch (mm)	0.0865 +/-0.001 (2.197+/-0.0254)
Dielectric Diameter, inch (mm)	0.066±0,001“1,68±0,0254mm
Center Conductor Diameter, inch (mm)	0.0201+/-0.0005 (0.511+/-0.0127)
Maximum Length, feet (meters)	20 (6.1 - 1 and 2m at stock)
Minimum Inside Bend Radius, inch (mm)	0.25 (6.35)
Weight, pounds/100 ft. (kg/100 meters)	1.25 (1.86)

Electrical Characteristics			
Impedance, ohms	50+/-2.0		
Frequency Range GHz	DC-61		
Velocity of Propagation %	70		
Capacitance, pF/ft. (pF/meter)	29.3 (95.1)		
Typical Insertion Loss, dB/ft. (dB/meter) and Average Power Handling, Watts CW at 20 degrees Celsius and Sea level	Frequency	Insertion Loss	Power
	0.5 GHz	0.31 (1,02)	143,1
	1.0 GHz	0,44 (1,46)	100,8
	5.0 GHz	1,02 (3,33)	44,3
	10.0 GHz	1,46 (4,79)	30,9
	20.0 GHz	2,11 (6,94)	21,3
Corona Extinction Voltage,VRMS@60Hz	1500		
Voltage Withstand, VRMS @ 60 Hz	5000		

SCB Service & Consulting
Hermann-Cossmann-Str. 19 | D-41472 Neuss
Tel.: +49-(0)2182-60804 | Fax: +49-(0)2182-60233
email: service@idbscb.de
www.scbshop.de | www.idbscb.de

Enviromental Characteristics	
Outer Conductor Integrity Temperature, Deg Celsius	225
Maximum Operating Temperature, Deg Celsius	200

Materials	
Outer Conductor	304 Stainless Steel
Dielectric	PTFE
Center Conductor	Silver Plated Beryllium Copper

SCB Service & Consulting
Hermann-Cossmann-Str. 19 | D-41472 Neuss
Tel.: +49-(0)2182-60804 | Fax: +49-(0)2182-60233
email: service@idbscb.de
www.scbshop.de | www.idbscb.de

FLEX TEST™

Test Cable

CBL-5FT-SMSM+

50Ω 5FT DC to 18 GHz

Maximum Ratings

Operating Temperature	-55°C to 105°C
Storage Temperature	-55°C to 105°C

Permanent damage may occur if any of these limits are exceeded.

Shielding Effectiveness	>100 dB
Power Handling at 25°C	891W Max. at 0.4 GHz
	539W Max. at 1 GHz
	363W Max. at 2 GHz
	180W Max. at 6 GHz
	117W Max. at 12 GHz
	88W Max. at 18 GHz
Jacket	Clear FEP

Features

- RoHS compliant
- wideband coverage, DC to 18 GHz
- extra rugged construction with strain relief for longer life
- stainless steel SMA connectors for long mating-cycle life
- useful over temperature range, -55°C to 105°C
- triple shield cable for excellent shielding effectiveness
- flexible for easy connection & bend radius
- superior stability of insertion loss, VSWR & phase vs. flexing
- 6 month guarantee*

Applications

- high volume production test stations
- research & development labs
- environmental & temperature test chambers
- replacement for OEM test port cables
- field RF testing
- cellular infrastructure site testing

CASE STYLE: GM1006-5

Connectors		Model	Price	Qty.
Conn1	**Conn2**			
SMA-MALE	**SMA-MALE**	CBL-5FT-SMSM+	$77.95 ea.	(1-9)

+ RoHS compliant in accordance with EU Directive (2002/95/EC)

The +Suffix has been added in order to identify RoHS Compliance. See our web site for RoHS Compliance methodologies and qualifications.

Outline Drawing

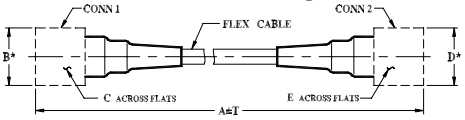

*OVERALL CONNECTOR OR CABLE & BOOT DIMENSION (CONNECTOR SHAPE MAY VARY)

Outline Dimensions (inch / mm)

A		B	C	D	E	T		wt
Feet	Meters	0.42	0.312	0.42	0.312	Feet	Meters	grams
5	1.52	10.67	7.92	10.67	7.92	0.15	0.05	126

Electrical Specifications at 25˚C

FREQ. (GHz)	LENGTH (FT)	INSERTION LOSS (dB)								RETURN LOSS (dB)							
		DC-2.5 GHz		2.5-6 GHz		6-12 GHz		12-18 GHz		DC-2.5 GHz		2.5-6 GHz		6-12 GHz		12-18 GHz	
f_L-f_U		Typ.	Max.	Typ.	Max.	Typ.	Max.	Typ.	Max.	Typ.	Min.	Typ.	Min.	Typ.	Min.	Typ.	Min.
DC-18	5	1.0	1.2	1.6	1.93	2.5	2.92	3.4	3.78	30	23	30	20	27	17	22	17

Custom sizes available, consult factory.

Cable Cross Section

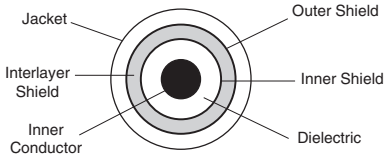

Cable Construction	
Inner Conductor	Solid Silver Plated Copper Clad Steel
Dielectric	Solid PTFE
Shield	Silver-Plated Copper Flat Ribbon Braid Aluminum-Polymide Tape Interlayer 36 GA Silver-Plated Copper Braid (90%k)
Jacket	Clear FEP
Connectors	
• passivated stainless steel • captive contact • thick wall interface (SMA) • gold plated beryllium copper center contacts • PTFE dielectric	

Typical Performance Data

Frequency (MHz)	Insertion Loss (dB)	Return Loss (dB)	
		SMA-MALE	SMA-MALE
0.30	0.02	58.38	55.00
1.00	0.02	52.55	51.43
10.00	0.06	42.13	41.88
100.00	0.17	44.97	46.75
1000.00	0.62	25.19	25.32
2000.00	0.88	30.27	30.04
4000.00	1.29	33.10	31.58
5000.00	1.48	30.13	28.32
6000.00	1.64	29.67	27.68
8000.00	1.97	28.98	27.02
10000.00	2.24	30.63	37.29
12000.00	2.52	27.14	30.36
14000.00	2.86	23.82	22.86
16000.00	3.15	25.71	27.09
18000.00	3.38	30.75	34.74

CBL-5FT-SMSM+
INSERTION LOSS

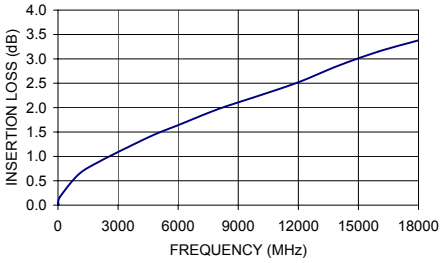

CBL-5FT-SMSM+
RETURN LOSS

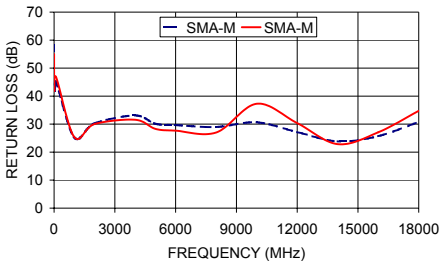

Product Guarantee*

Mini-Circuits® will repair or replace your test cable at its option if the connector attachment fails within six months of shipment. This guarantee excludes cable or connector interface damage from misuse or abuse.